REFRIGERATORS

TS1 130

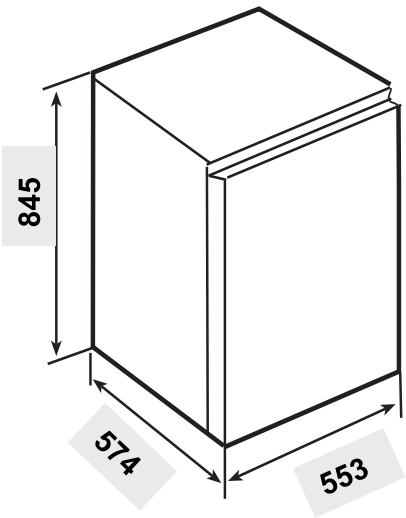

FEATURES

- Free Standing Table Top Larder
- Mechanical control
- Manual Defrost
- Adjustable thermostat
- Reversible door
- 3 Glass Shelves
- 3 Balconies on door
- 1 Vegetable Drawer
- Adjustable front feet
- Hidden evaporator
- Annual consumption: 117 kWh/year
- 1 compressor / R600a / 17 gr
- Noise level: 39 dBA
- Energy class: A+
- Climate class: N-ST
- Total Gross capacity : 136 Liters
- Total net Capacity Fridge:133 litres
- Power supply: 220-240 V/50 Hz
- Dimensions (h/w/d): 845/553/574 mm

TS1 130

CODE	40670310
EAN13	8421152134023